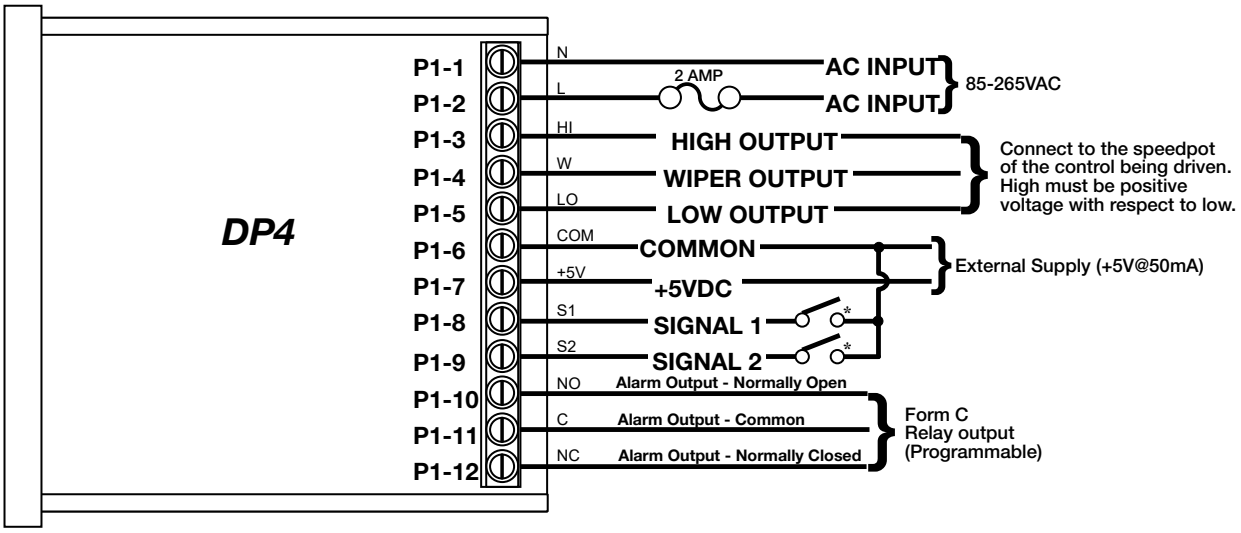

* P1-8 & P1-9 signal inputs may be programmed for a number of functions.