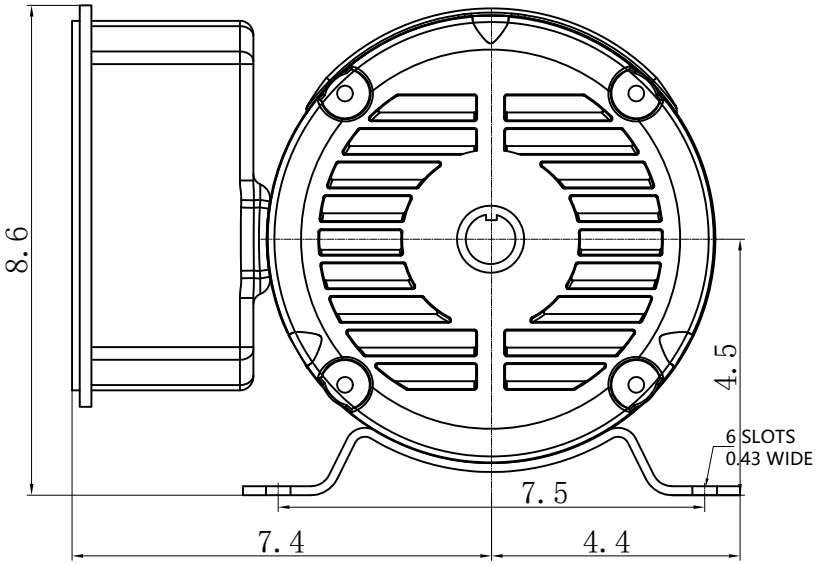

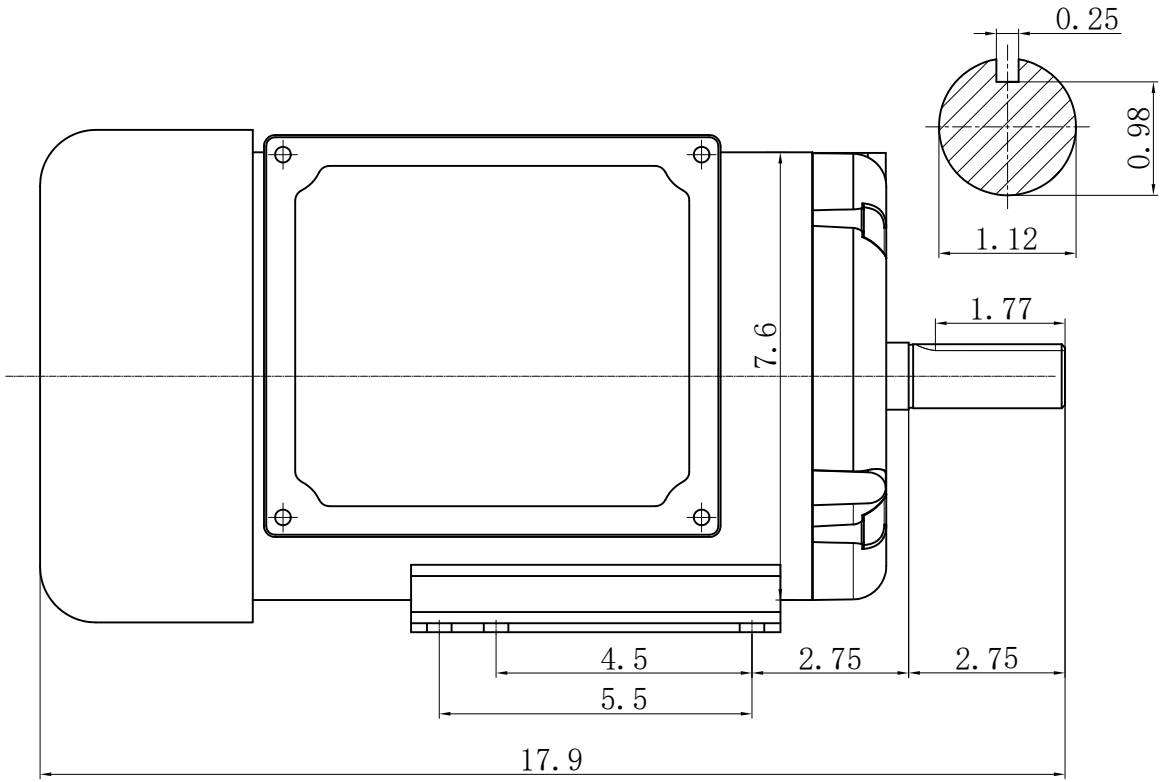

MODEL	ED4N005-1
PART	
HP	5
RPM	1725
VOLTAGE	230
FRAME	184T
FREQUENCY	60
CURRENT	21.5
EFF%	84%
POWER FACTOR	0.9
DUTY	CONT
SERVICE FACTOR	1.15
AMBIENT TEMP	40℃
INSULATION CLASS	F
RATED TORQUE	189.4LB.IN
LOCKED ROTOR TORQUE	555.4LB.in
BREAKDOWN TORQUE	516.8LB.IN
LOCKED ROTOR AMPS	150
KVA CODE	H
DE BEARING	6206RZ
ODE BEARING	6206RZ
ENCLOSURE	TEFC
PROTECTOR TYPE	MANUAL RESET
ROTATION	CCW/CW
BASE/FEET	RIGID

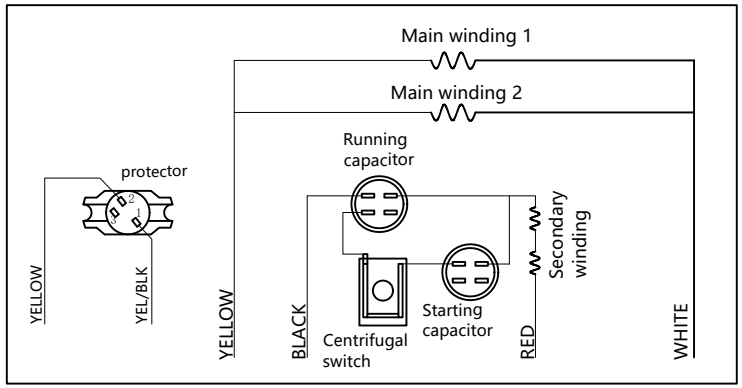

YEL/BLK(P1) — LINE 1
YELLOW(P2)
YELLOW(T1) — INS
RED(T8)
WHITE(T2) — LINE 2
BLACK(T5)

SWITCH RED AND BLACK LEADS TO REVERSE ROTATION TO CCW-OPE AT EITHER VOLTAGE

ACCEPTABLE FOR FIELD WIRING

Tag	Number	Rejigger	Signature	Date
Designed		Standard		
Collated		Confirm		
Checked				
Technics		Date		

Drawing mark | Weight | Scale

Total page | NO. page

Brook Crompton

Farm duty TEFC motor
Data Package

ED4N005-1