Motor Data Sheet

BROOK CROMPTON
Keeping Industry Turning

Supplied To.		**Type Code**	**Frame Ref.**
		MC4N005-9	*184T*
		Starting Method	
Manufacturing Standard *NEMA MG-1, IEEE841*		**Output** *5* Hp	**Supply** *460* V
Frame Material *Cast Iron*	**Mounting** *F1/F2*	**VFD Duty** *Variable torque 10:1* *Constant torque 5:1*	**Connection type** Y
All Data Below based on 460V @ 60hz			
Item No.			
Sales order / Line no.		**L.R. PF** *0.378*	**Amps** *@460V 7.0*
Account No.			

Load (Hp)	**Full**	**3/4**	**1/2**
Efficiency	*89.5*	*89.2*	*87*
Power Factor	*0.81*	*0.81*	*0.79*
Amps (Ia) at 460V	*7.0*	*4.8*	*3.4*
Speed (rpm)	*1756*	*1775*	*1783*

N.L. amps *1.5*	**Hertz** *60*
N.L. PF *0.2*	**Poles/rpm** *4 / 1800*
Duty *S1*	**Cooling Code** *TEFC/IC411*

Efficiency	**Insulation**	**Temperature rise Class**	
PREMIUM	*F*	*B*	
Phase	**Service Factor**	**cos Ø**	**IP**
3	*1.15*	*0.81*	*55*

Speed / Torque Curve

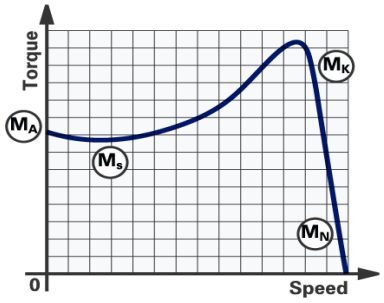

FLT (Mn)			*14.6*	ft-lb
LRT (DOL) (Ma/Mn)	*2.0*	FLT	*28.6*	ft-lb
LRT (DOL) 80% V	*1.3*	FLT	*18.3*	ft-lb
PUT (Ms/Mn)	*0.9*	FLT	*12.5*	ft-lb
POT (Mk/Mn)	*2.4*	FLT	*35.2*	ft-lb

Noise pressure level at 1m no load	*62*	dB(A)
DE bearing Ref.	*6206/C3*	
NDE bearing Ref.	*6206/C3*	
Lubrication grease		
Lubrication interval (hrs)	*DE 8470*	
	NDE 8470	
Rotor inertia	*0.028*	kgm/sq
Vibration levels less than	*1.8*	mm/sec
Shaft details Ø	1.125" x 2.75"	LONG EXT'N
T.Box entry	0.75"-14NPT	

Speed / Current Curve

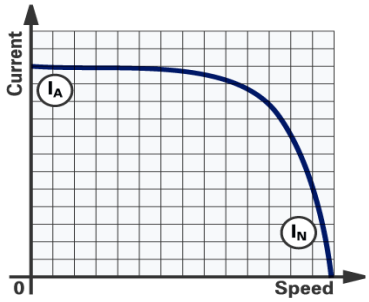

LRC (DOL) (Ia/In)	*5.7*	FLC	*83.8*	amps
LRC (DOL) 80% V	*3.2*	FLC	*22*	amps
External inertia (WR^2)				*KGM^2*
No of starts/Hr with above inertia				
Starting time with above inertia				*Secs*

Motor weight (Approx. net)	*136.71*	lb
L.R. Time hot	*17.6*	secs
L.R. Time cold	*43.2*	secs
A.R.T. 100% Volts	*17.6*	secs
A.R.T. 80% Volts	*35.1*	secs
Number of terminals	*3 wire*	
NEMA Design letter	*J*	
Maximum volts drop at start:	*20%*	
Maximum Altitude	*3300*	ft
Ambient temp range	*-20 - 40*	°C
Thermal time constant	*90 Minutes*	
Direction of rotation	*CW/CCW/BI*	
Winding thermistors fitted	*As Option*	°F
Winding thermostats fitted	*As Option*	°F
Anti condensation heaters	*1/120V/60W*	Volts
Drawing number	*1AP.050.0390.4WXY*	
Certifying Authority	*CSA (C=US)*	
Certificate No.		
Marking	*Class 1 Div 2 Grps A,B,C,D*	

Remarks

1AP.050.0552.1-8WX

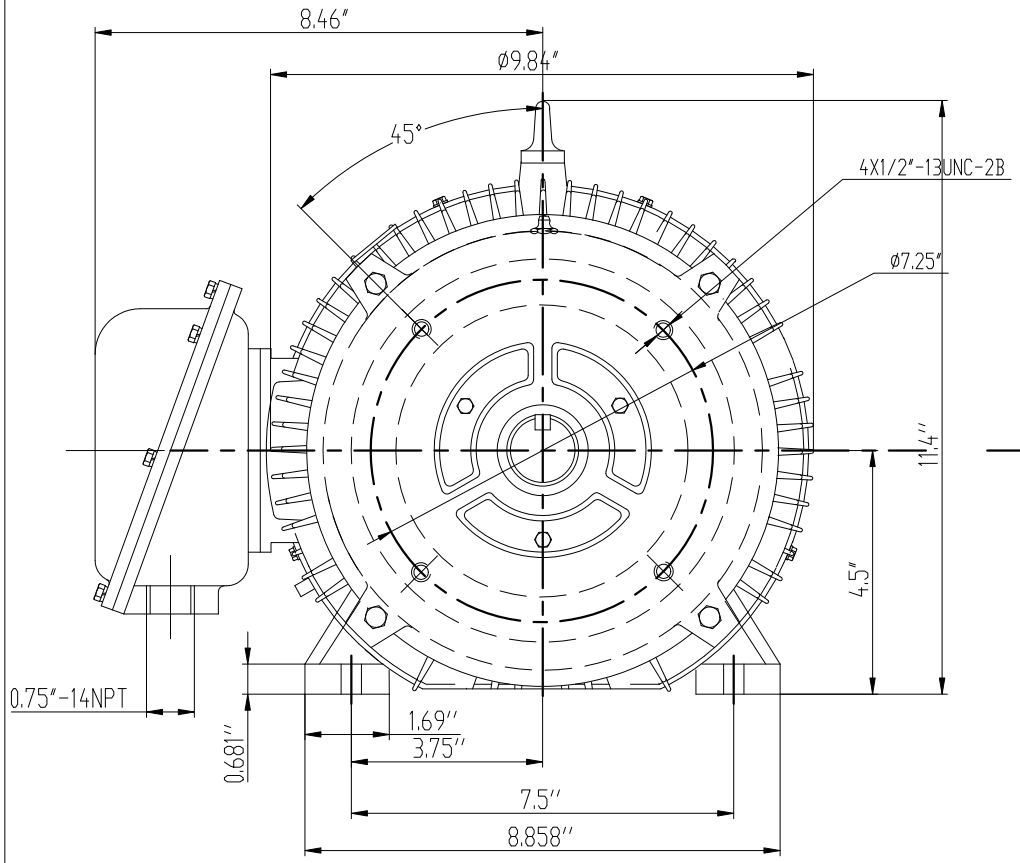

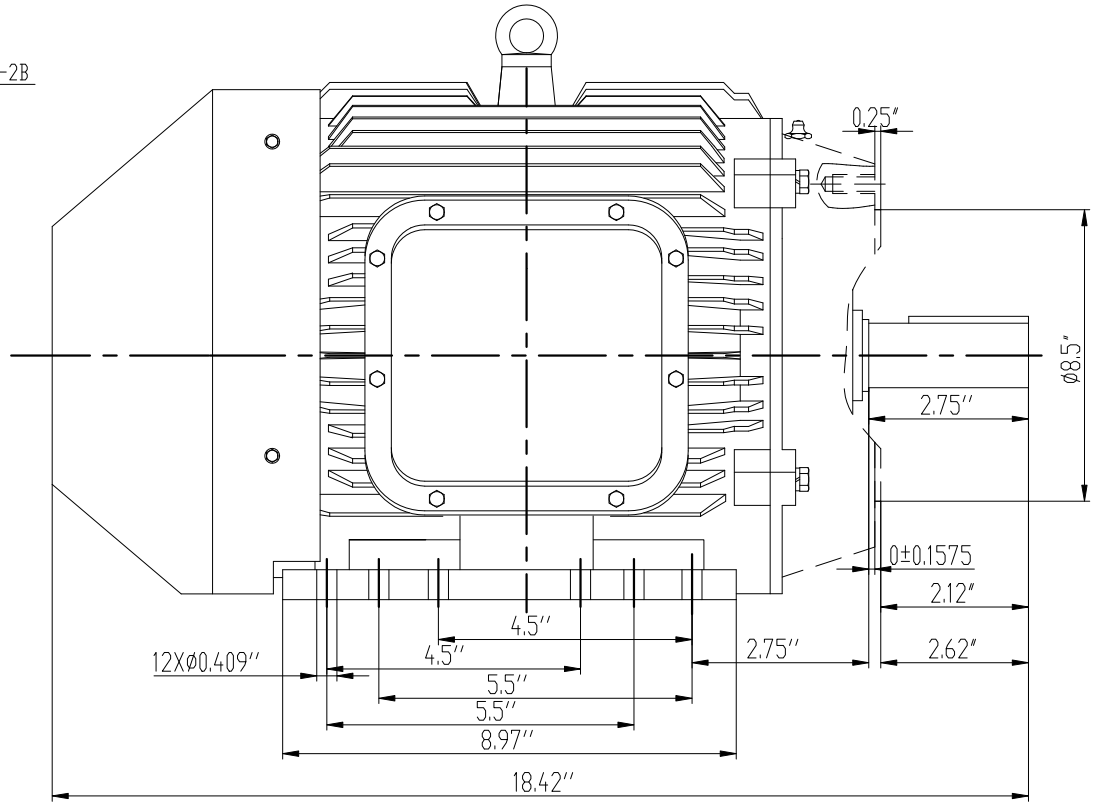

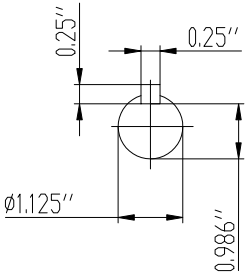

LET.	REVISION	BY	DATE

DESIGN	REN XIAOHUA
REVIEW	XIE XIAOLONG
APPROVE	YU JIABIN
DATE	20170526

NSHE180 MOTOR

F-1

1AP.050.0552.1-8WX

WEIGHT	SCALE
	1:1

BROOK CROMPTON
Keeping Industry Turning